REVISIONS				
ZONE	REV	DESCRIPTION	DATE	APPROVED

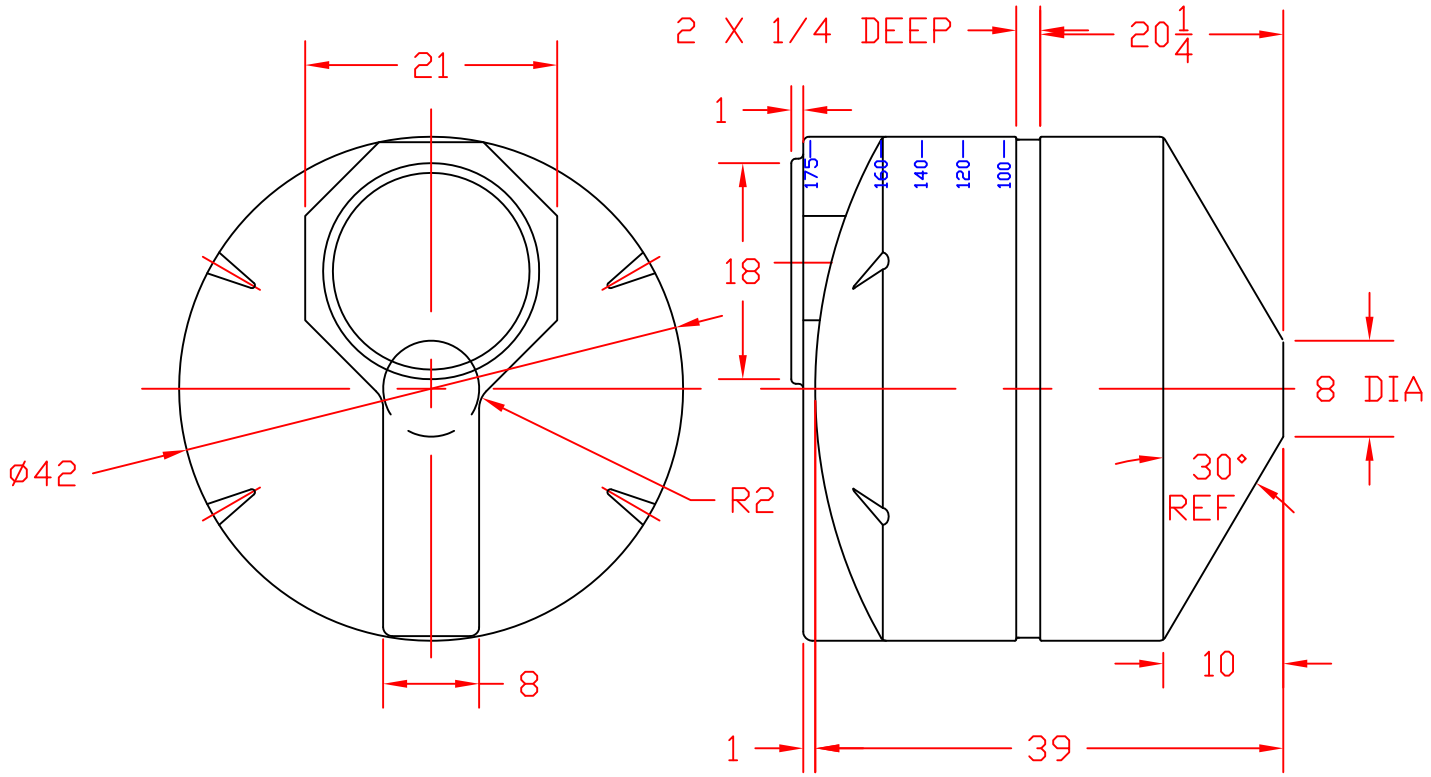

NORWESCO
ST. BONIFACIUS, MN

175 GALLON CONE BOTTOM TANK

JTP 08JUN12	SIZE A	FSCM NO.	DWG NO.	REV
	SCALE 1/16		SHEET	