ITEM	CRITICAL DIMENSIONS	MAX.	MIN.
A	WALL THICKNESS	.21"	.15"
B	PRODUCT WEIGHT	21.25 lbs.	20.75 lbs.

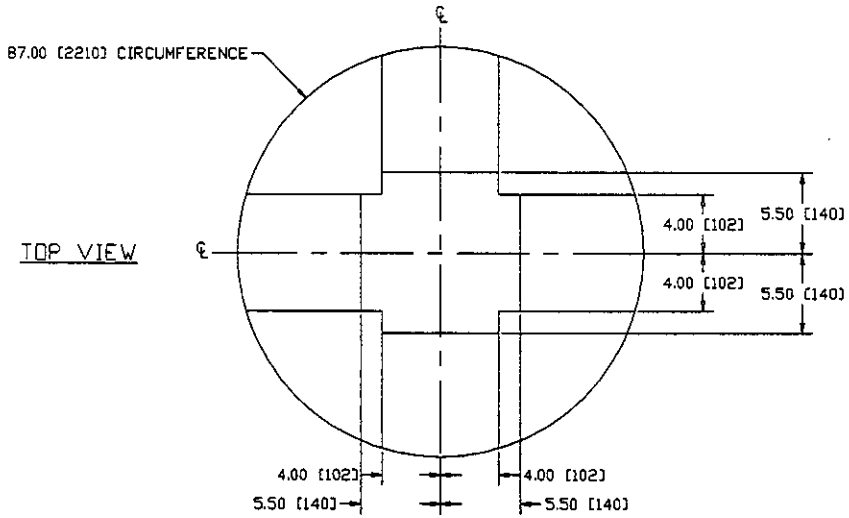

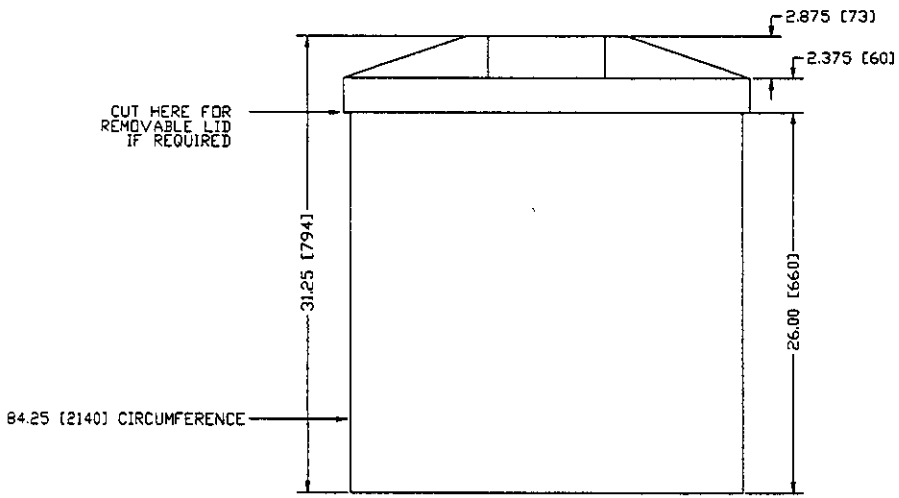

FRONT VIEW

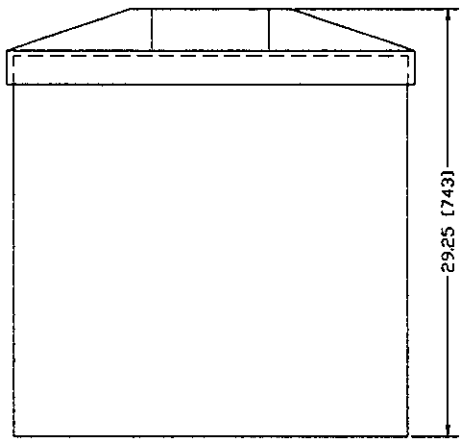

SIDE VIEW

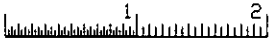

scale 1/10 of an inch

NOTE: 1. ALL DIMENSIONS ARE SHOWN IN INCHES AND [MILLIMETERS].

REV.	DESCRIPTION	DRW'N	CK'D	APP'D	DATE
A	REV. TOL, ADDED CRIT DIM, PREVIOUS DWG.# W00097A.	P.M.S.	V.J.C.	J.P.P.	95/05/23

ALL TOLERANCES = ± .0625 in. OR ± 1.6mm UNLESS OTHERWISE NOTED

WESTLAND PLASTICS LIMITED

DRW'N. BY:	CJP	DATE:	OCT 5/93
CK'D BY:	JPP	DATE:	OCT 5/93
APP'D BY:	HS	DATE:	OCT 5/93
SCALE:	1 = 9	PAGE:	1 OF 1

PRODUCT NAME: MC50GAL

DRAWING NO. W0097A

B