REVISIONS				
ZONE	REV	DESCRIPTION	DATE	APPROVED

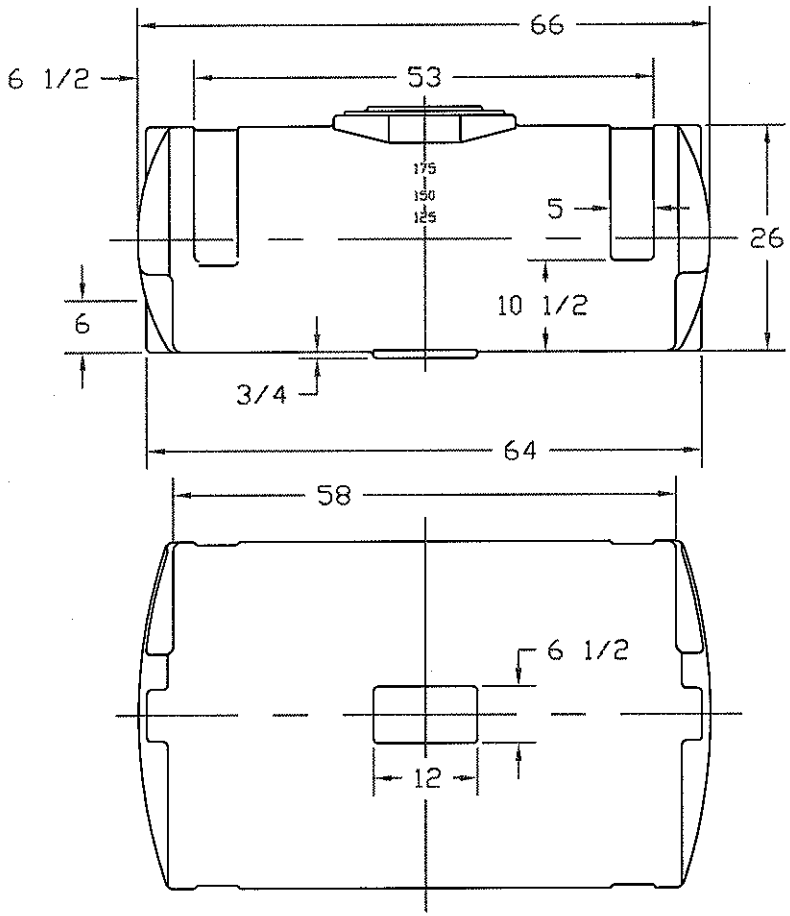

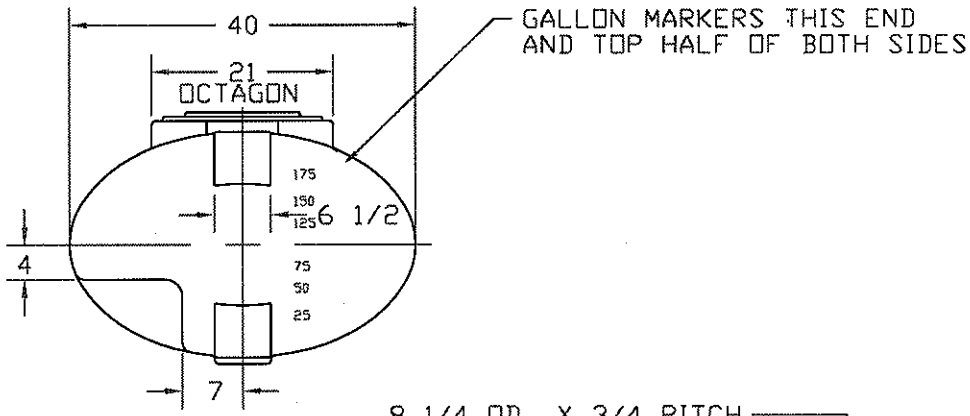

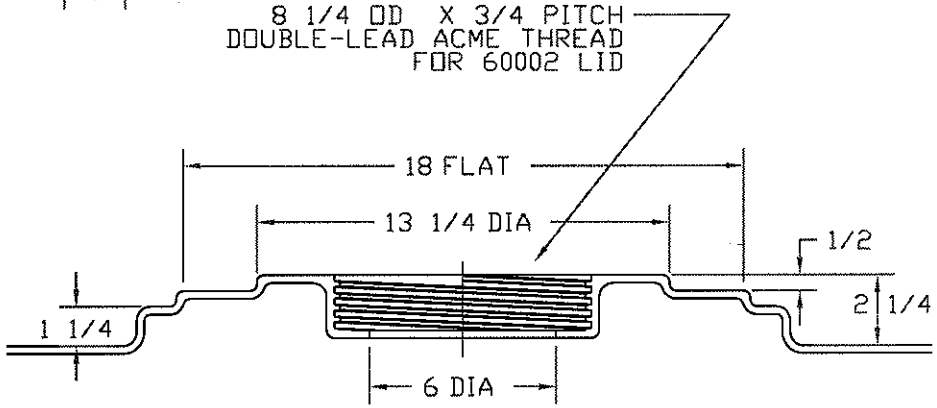

FILLWELL DETAIL
1/4 SCALE

	NORWESCO ST. BONIFACIUS, MN			
	200 GALLON ELLIPTICAL SPRAYER TANK			
JTP 07SEP99	SIZE B	FSCM NO.	DWG NO.	REV
	SCALE 1/16		SHEET	