NOTE:

1 - All dimensions are shown in mm.
Dimensions in brackets are in feet/inches.
2 - Optional prefabricated engineered
concrete deadmen shown.
3 - Actual capacity - 6,836 LITRES/1,806 US gals.

0	REVISION DESCRIPTION -					
DRN -	DATE -	CHK'D -	DATE -	APPR'D -	DATE -	

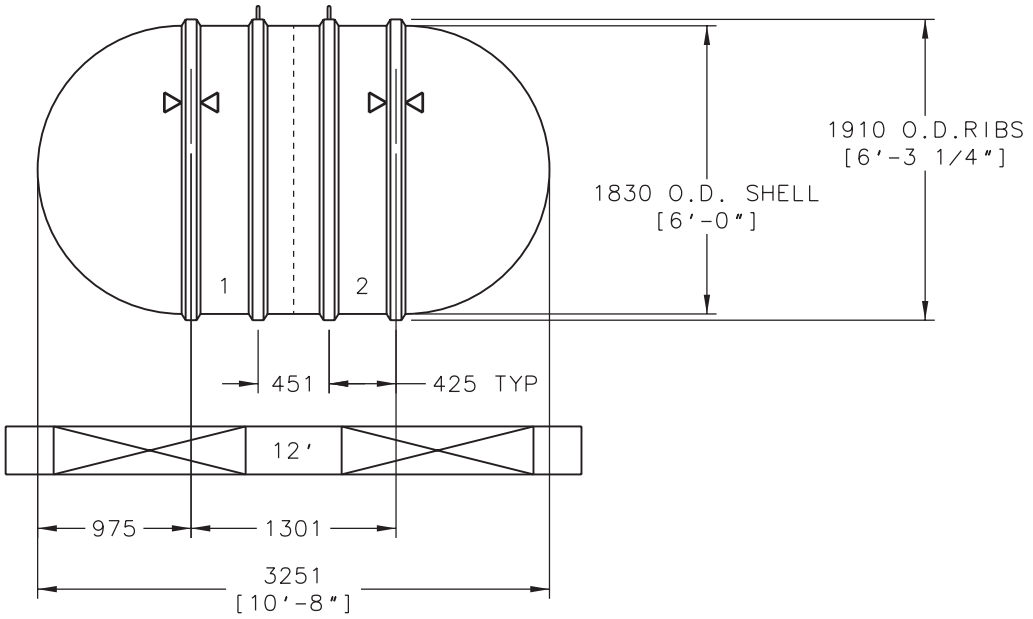

DISTRIBUTED BY
POLYWEST liquid handling products
WINNIPEG MB - 1-800-301-8265
SASKATOON SK - 1-877-339-3350
EDMONTON AB - 1-866-750-0725
www.POLYWEST.ca

ZCL COMPOSITES INC.

DRN DAG	DATE 8-12-09	TITLE 6'DIA SW-ZCL CAP. 5,000 LITRES 1,500 US GALS		
CHK'D	DATE			
APPR'D JWL	DATE 8-12-09	DR. NUMBER 634-600	REV 00	DR. SIZE C
SCALE: 1/2"=1'-0"				